Centre Number	Candidate Number	Name

UNIVERSITY OF CAMBRIDGE INTERNATIONAL EXAMINATIONS
General Certificate of Education Advanced Level

PHYSICS **9702/05**

Paper 5 Practical Test

May/June 2005

1 hour 30 minutes

Candidates answer on the Question Paper.
Additional Materials: As specified in the Confidential Instructions.

READ THESE INSTRUCTIONS FIRST

Write your Centre number, candidate number and name on all the work you hand in.
Write in dark blue or black pen in the spaces provided on the Question Paper.
You may use a soft pencil for any diagrams, graphs or rough working.
Do not use staples, paper clips, highlighters, glue or correction fluid.

Answer **both** questions.

You are expected to record all your observations as soon as these observations are made, and to plan the presentation of the records so that it is not necessary to make a fair copy of them. The working of the answers is to be handed in.
Marks are mainly given for a clear record of the observations actually made, for their suitability and accuracy, and for the use made of them.
Additional answer paper and graph paper should be submitted only if it becomes necessary to do so.
You are reminded of the need for good English and clear presentation in your answers.

At the end of the examination, fasten all your work securely together.

If you have been given a label, look at the details. If any details are incorrect or missing, please fill in your correct details in the space given at the top of this page.

Stick your personal label here, if provided.

For Examiner's Use	
1	
2	
Total	

This document consists of **10** printed pages and **2** blank pages.

© UCLES 2005

It is recommended that you spend about 60 minutes on this question.

1 In this question you will investigate how the period of oscillation of a loaded steel blade varies with the length of the blade and use the results of your experiment to determine a value for the Young modulus of steel.

(a) Use the G-clamp and the small blocks of wood to clamp the steel blade to the bench as shown in Fig. 1.1. The blade has two small 50 g masses attached to one end. You should not disturb the position of these masses during the course of the experiment.

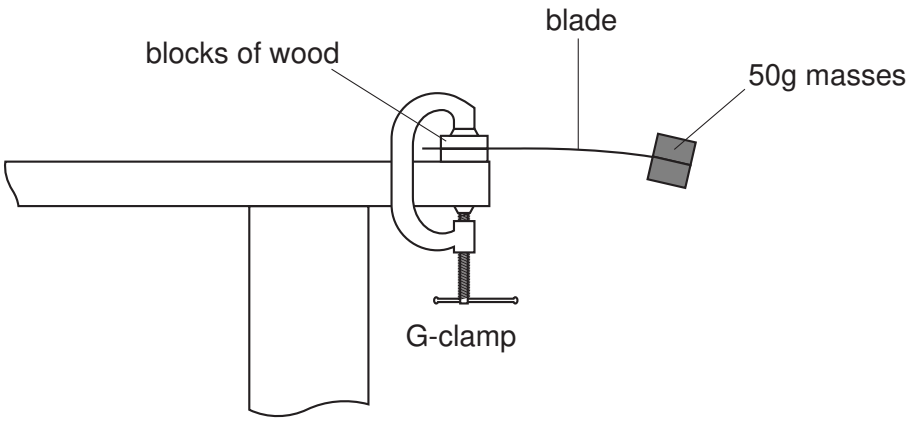

Fig. 1.1

(b) **(i)** Measure and record the distance *d* from the centre of the masses to the edge of the blocks as shown in Fig. 1.2. You will need to hold the blade horizontal when you make the measurement of *d*.

© UCLES 2005

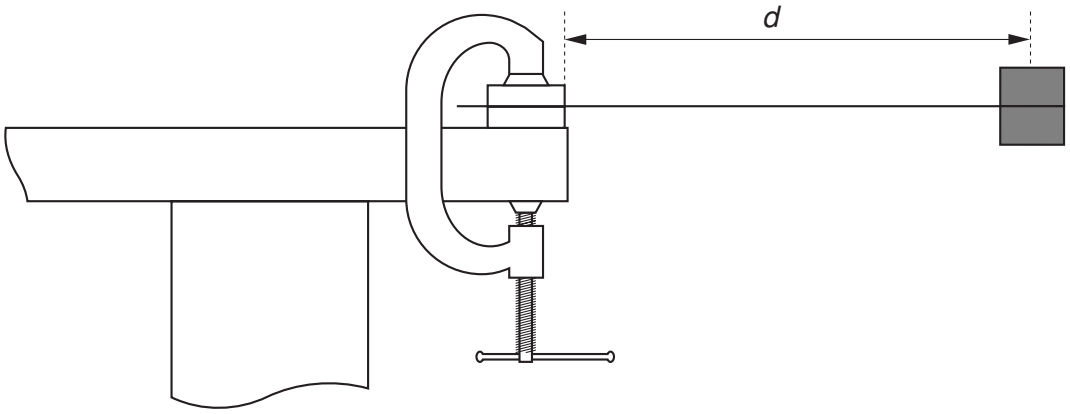

Fig. 1.2

d = ... m

(ii) Displace the end of the blade from its equilibrium position and release it so that the strip performs small oscillations in a vertical plane. Make and record measurements to determine the period *T* of oscillation of the blade.

T = ... s

(c) Change the value of d and repeat **(b)(i)** and **(ii)** until you have six sets of readings of distance d and period T for values of d in the range 0.130 m < d < 0.250 m.

Include in your table of results all six sets of values for lg (T/s) and lg (d/m).

(d) **(i)** Plot a graph of lg (T/s) (y-axis) against lg (d/m) (x-axis).

(ii) Draw the line of best fit.

(iii) Determine the gradient and the y-intercept of this line.

gradient = ...

y-intercept = ...

© UCLES 2005

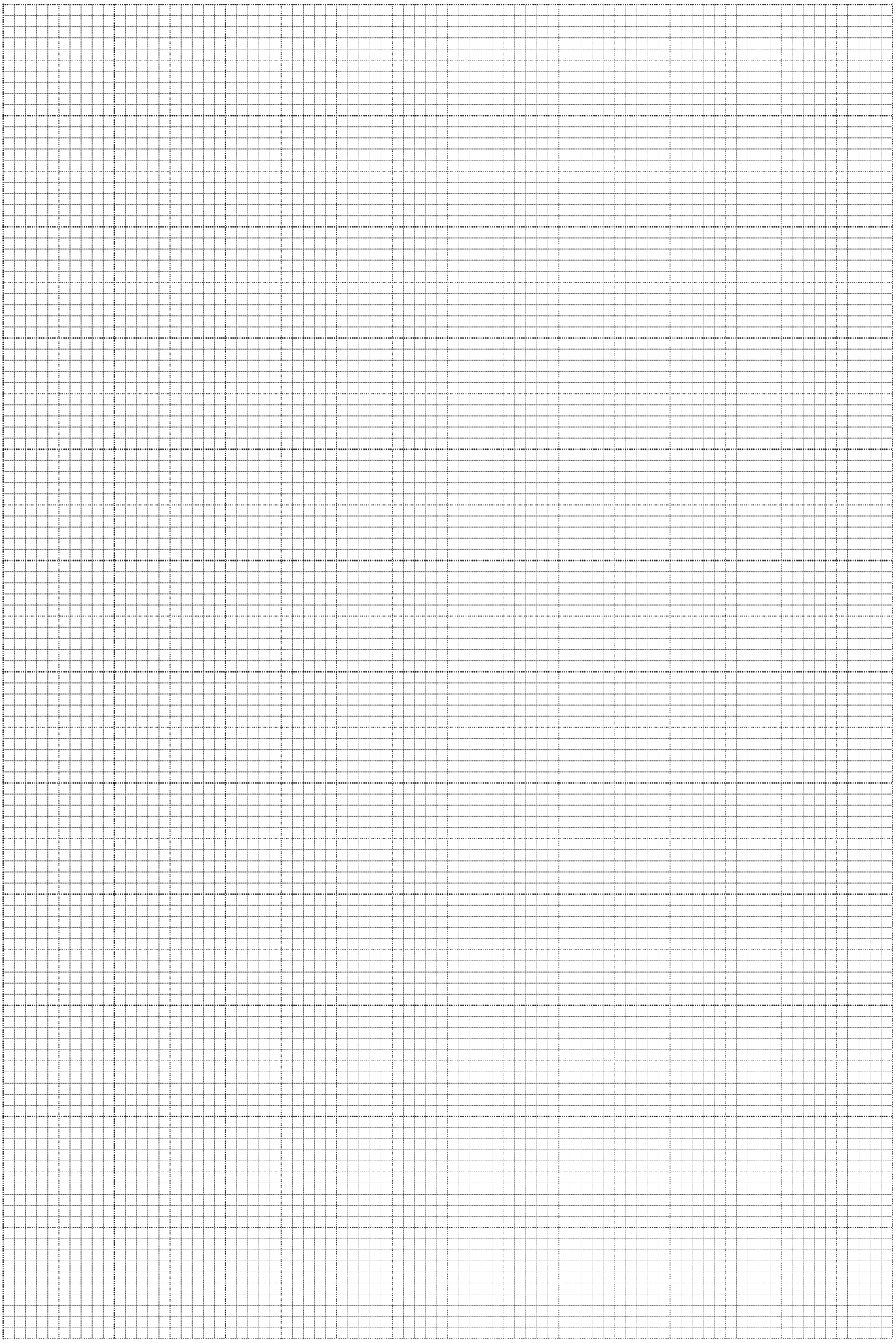

(e) Theory suggests that T and d are related by a simple power law of the form

$$T = kd^n$$

where n and k are constants.

Use your answers from **(d)(iii)** to find the values of n and k.

You need not be concerned with the units of these quantities.

n = ...

k = ...

A theoretical treatment of this oscillator suggests that

$$k = \sqrt{\frac{16\pi^2 M}{Ebt^3}}$$

where M is the mass attached to the end of the blade, E is the Young modulus, b is the width of the blade and t is the thickness of the blade as shown in Fig. 1.3.

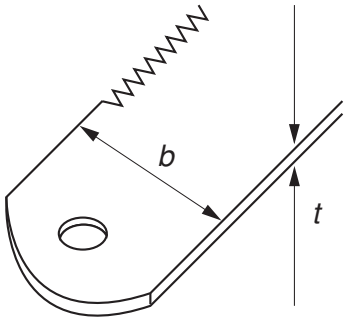

Fig. 1.3

© UCLES 2005

For Examiner's Use

(f) **(i)** Measure the values of b and t. The measurement of t should be made on a part of the blade where there is no tape.

b = ... m

t = ... m

(ii) State the name of the instrument used to measure t.

.....

(iii) Estimate the percentage uncertainty in the value of t^3.

percentage uncertainty in t^3 = ... %

(g) Determine a value for E. Include an appropriate unit.

E = ...

© UCLES 2005

[Turn over

It is recommended that you spend about 30 minutes on this question.

2 Many homes have smoke detectors fitted to the ceilings of certain rooms to provide an early warning of a fire. These detectors contain a weak radioactive source that ionises the air between two metal plates. See Fig. 2.1.

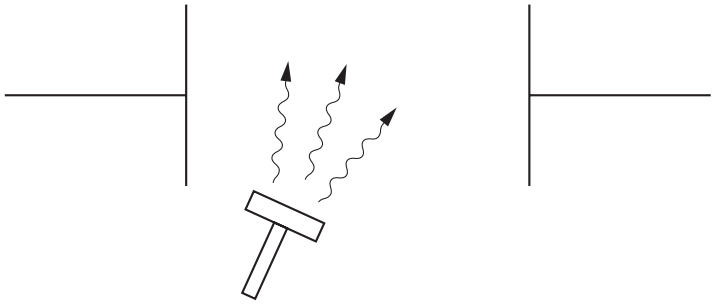

Fig. 2.1

A low voltage battery in the detector causes the ions to move. This produces a very small ionisation current in a circuit containing the battery and the plates. Any reduction in this ionisation current due to smoke is detected and an alarm sounds.

An airline company wishes to install some of these smoke detectors in its aircraft and needs to know if changes in air pressure will affect the ionisation current.

Design a laboratory experiment to investigate how the ionisation current depends on air pressure. You should draw a detailed labelled diagram showing the arrangement of your apparatus. In your account you should pay particular attention to

(a) the type of source used in the investigation (i.e. whether it is an alpha, beta or gamma emitter) giving a reason for your choice,

(b) how the ionisation current would be measured (given that it is very small),

(c) the method of changing and measuring the air pressure,

(d) the procedure to be followed,

(e) any safety precautions that you would take.

© UCLES 2005

Diagram

.....

.....

.....

.....

.....

.....

.....

.....

.....

© UCLES 2005

© UCLES 2005

BLANK PAGE

BLANK PAGE

Permission to reproduce items where third-party owned material protected by copyright is included has been sought and cleared where possible. Every reasonable effort has been made by the publisher (UCLES) to trace copyright holders, but if any items requiring clearance have unwittingly been included, the publisher will be pleased to make amends at the earliest possible opportunity.

University of Cambridge International Examinations is part of the University of Cambridge Local Examinations Syndicate (UCLES), which is itself a department of the University of Cambridge.